DH1~DH2=25816 (±20)
Stroke for PB
must be minumum
$600^{+200}_{+0}\mu m$

Coordinates

記号	X	Y	R
GM	0	0	—
DH1	3000	13000	—
DH2	2100	-12800	—
a1	3441	14908	430
a2	1865	15186	430
a3	-15151	2129	430
a4	-15291	535	430
a5	10434	-11190	430
a6	9208	-12219	430

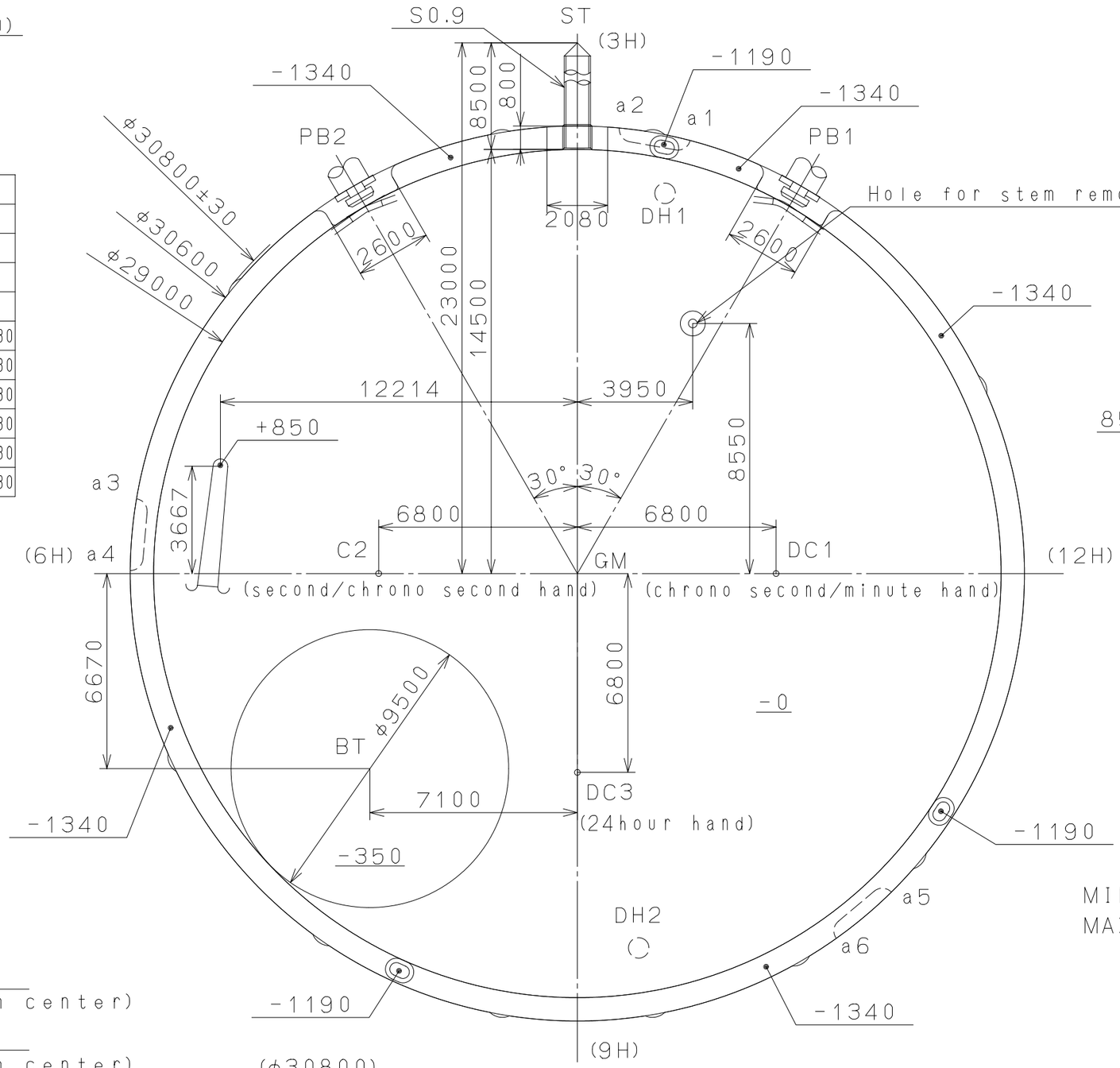

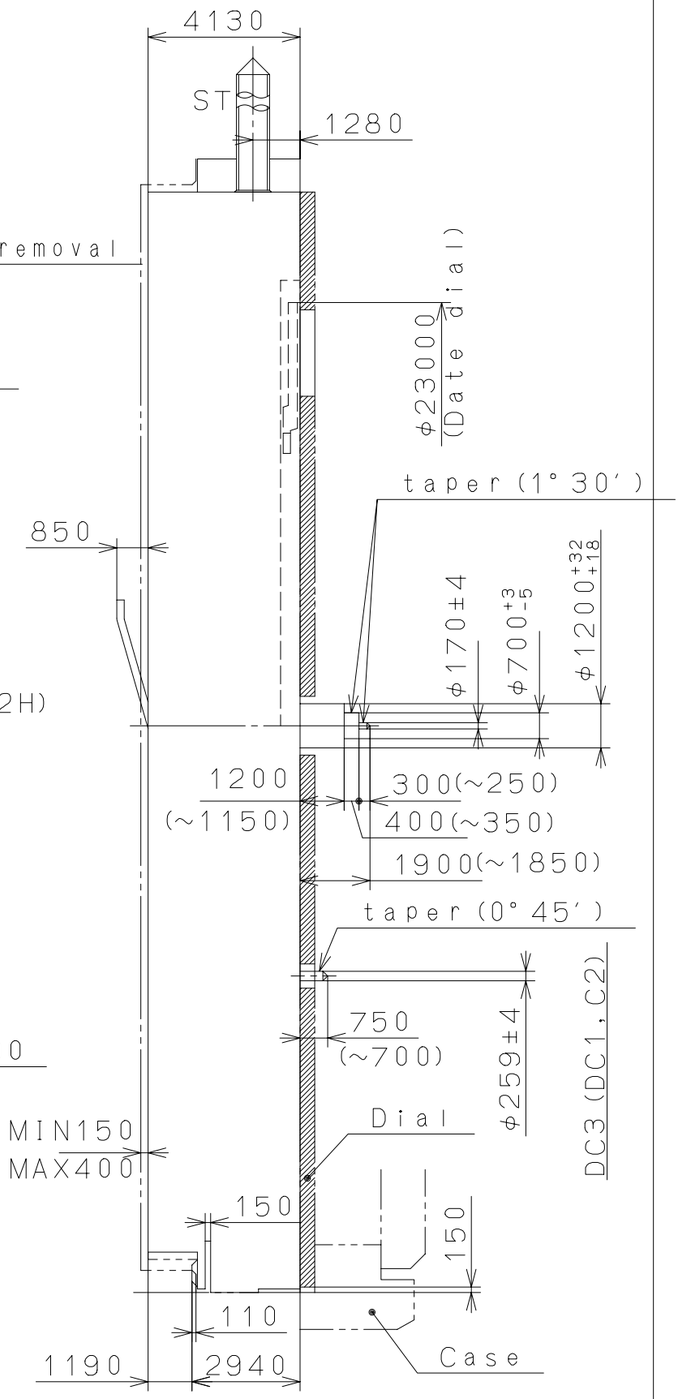

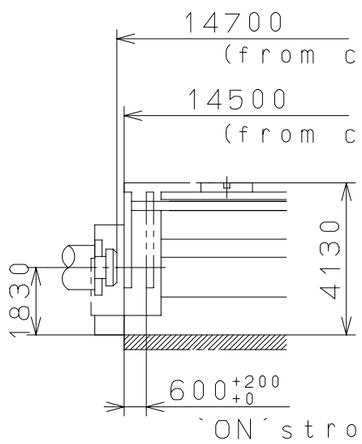

Section PB1,2

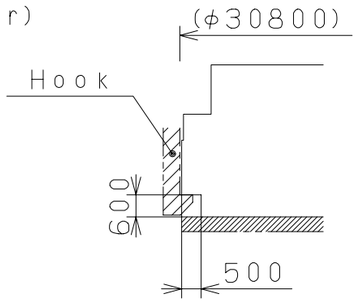

Section a1~a6

Mark	Date	Description	Appro.			
5						
4						
3						
2						
1						

Alterations

Quantity			Cal.NO.: 0S90
Unit	1/1000mm		
Scale	6/1		Parts No.:
	Date	Name	
Drawn			
Checked		M.Fukuda	Name:
Approved			Frame for Case
			Drawing No.: 0S90C000
General Tolerances			MIYOTA
Dimensions			
Angles			

Material
Heat Treatment
Hardness
Plating

This drawing is provisional and subject to our reconfirmation and/or revision without notice.

2004/07/28 (14:32:27)